Indication

Hair removal
Dark/light hair -
Thick/thin hair -
Any body areas -
Any skin types -

Pigmented lesions
Freckles -
Seborrheic keratosis -
Dyschromia -

Vascular lesions
- Telangiectasia
- Blue vascular
- Facial flushing
- Inflammatory acne
- Rosacea
- Nevus flammeus
- Hemangioma
- Spider veins

Rejuvenation
- Wrinkles
- Skin laxity

Technical specification

Laser Medium	Nd:YAG, Alexandrite
Wavelengths	1064, 755 nm
Beam Delivery	Lens-coupled optical fiber with handpiece
Energy	Max. 90 J @ 1064 nm Max. 60 J @ 755 nm Max. 45 J @ 1064 nm + 755 nm
Fluence	1273 J/cm2 @ 1064 nm 849 J/cm2 @ 755 nm 636 J/cm2 @ 1064 nm + 755 nm
Pulse Duration	0.3 – 100 ms
Spot Size	3, 5, 7, 10, 12, 15, 18, 20,22 mm (Zoom HP) 3, 6, 10, 12, 15, 18, 20, 22 mm (Cartridge HP)
Repetition Rate	1-9 Hz
Aiming Beam	532 nm (< 5 mW)
Cooling	Cryo gas & Air cooling system
Dimension (W*L*H)	1050 mm (W) X 500 mm (L) X 1100 mm (H)
Weight	105 Kg

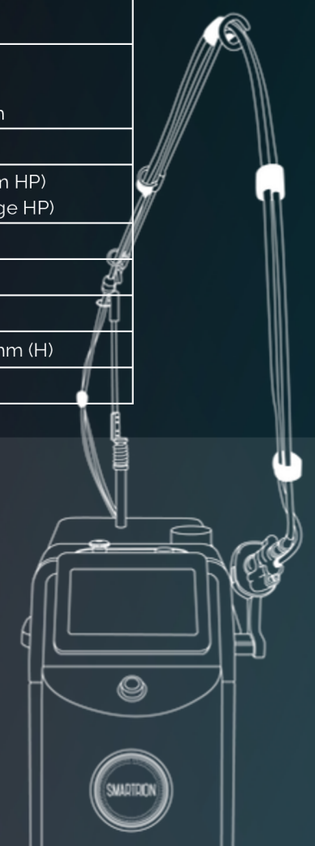

www.ids.co.kr
info@ids.co.kr
+ 82 2 2025 1151
#908, SJ Techno Ville, 278, Beotkkot-ro, Geumcheon-gu, Seoul, Korea

FDA CE

For international use only

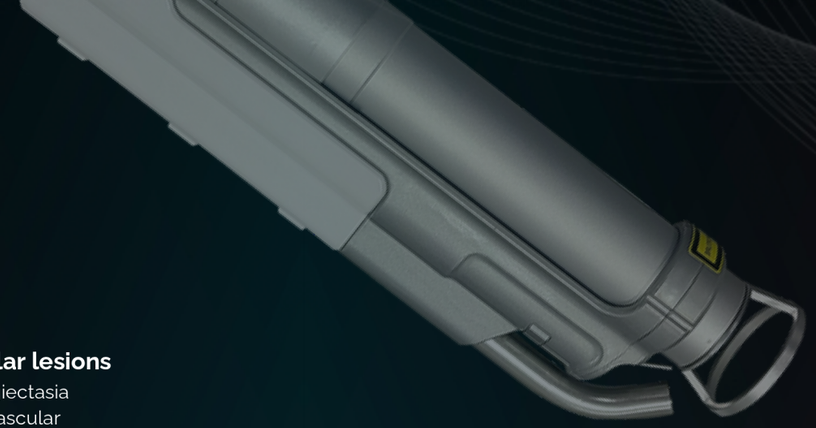

SMARTRION COMBI

Alexandrite & Long-pulsed Nd:YAG Laser

Single Wavelength - 755 nm

Single Wavelength - 1064 nm

Mixed Wavelengths - 755 nm + 1064 nm

SMARTRION COMBI is an innovative long-pulsed laser device developed by IDS, featuring a real top-hat uniform beam profile and dual wavelengths—1064 nm and 755 nm—within a single platform for a wide range of indications including hair removal, treatment of vascular lesions and pigmented lesions and more.

What sets SMARTRION COMBI apart is its unique capability to simultaneously deliver both 1064 nm and 755 nm wavelengths, allowing physicians to precisely target diverse chromophores at varying depths, enabling a versatile approach.

Moreover, the SMARTRION COMBI offers enhanced versatility through its provision of two handpieces—the zoom and cartridge handpieces—to cater to different treatment needs. Additionally, it provides two cooling options—gas or air—allowing physicians to customize treatments. Notably, its gas component boasts an extended lifespan of up to 25,000 shots.

Effect and safe treatment by top-hat beam profile

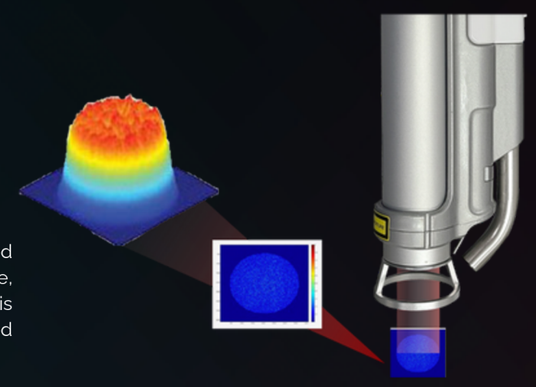

The top-hat beam profile ensures a uniformly distributed energy pattern across the treatment spot size, guaranteeing consistent and predictable outcomes. This uniformity also minimizes the risk of side effects caused by localized hot spots.

Top-hat beam	Dual wavelengths	Two handpieces
Effect and safe treatment	Simultaneous 1064 nm and 755 nm	Zoom handpiece or Cartridge handpiece
Two cooling options	**Long-lasting gas**	**Others**
Gas cooling or Air cooling	900 gram capacity Max. 25,000 shots Refillable	Faster hair removal at 3 Hz Smart protocol Automatic cooling system CRYO-ZET

Simultaneous 1064 nm and 755 nm

The SMARTRION COMBI's simultaneous emission of two wavelengths, 1064 nm and 755 nm, enables physicians to effectively target diverse chromophores at different depths, presenting a versatile approach to treatments.

For instance, by emitting both 1064 nm and 755 nm simultaneously, physicians can perform hair removal treatments tailored to various hair types—whether thick or thin, black or grayish, and at different depths—offering a comprehensive solution. This adaptability extends to treating pigmented lesions, allowing the targeting of pigments located at varying depths.

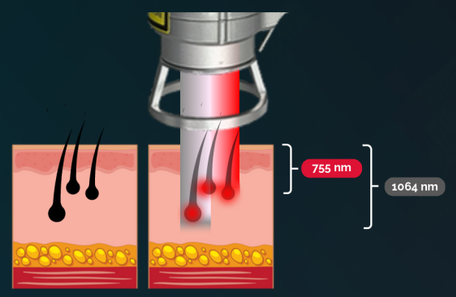

Removal of hair removal by simultaneous 1064 nm and 755 nm

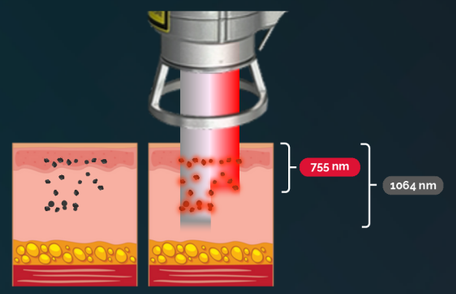

Removal of pigmented lesion by simultaneous 1064 nm and 755 nm

Selectable options between two types of handpieces

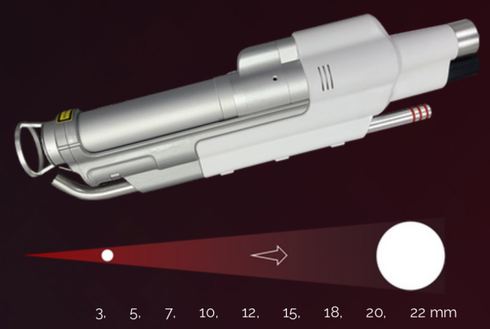

The zoom handpiece allows for easy spot size adjustment without the need to switch handpiece cartridge. Physicians can swiftly rotate the toggle ring to select their preferred spot size, saving valuable treatment time. Moreover, this eliminates the necessity to purchase numerous handpiece cartridges, resulting in cost savings on investments.

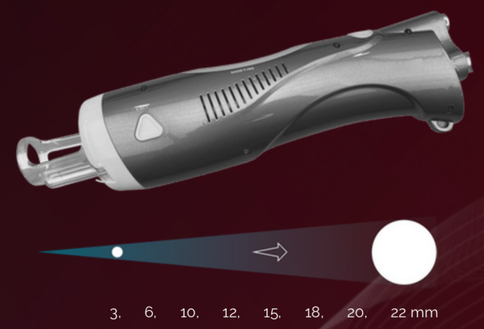

For physicians who are accustomed to using cartridge-typed long-pulsed lasers from different manufacturers and find it more comfortable, opting for a cartridge handpiece over a zoom handpiece is an option.

Two cooling options

Two cooling options are available: the 'Gas-type' and 'Air-type.' Physicians have the flexibility to select either based on their specific requirements for the intended treatment.

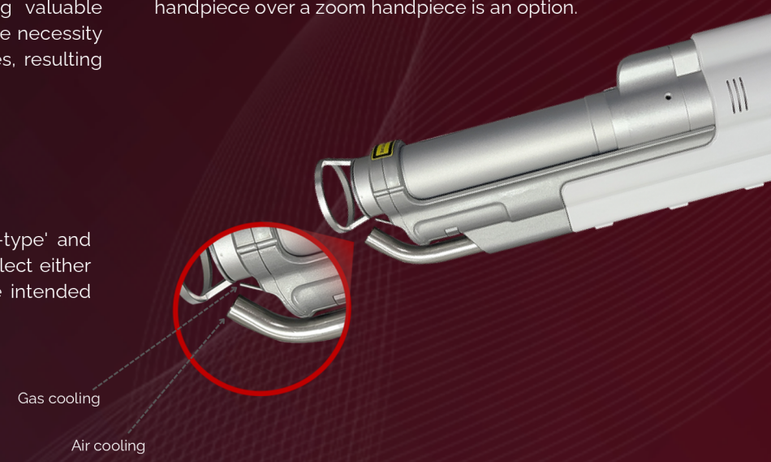

For international use only